SCHMIDT
control instruments

Tension Sensor Model MBZB

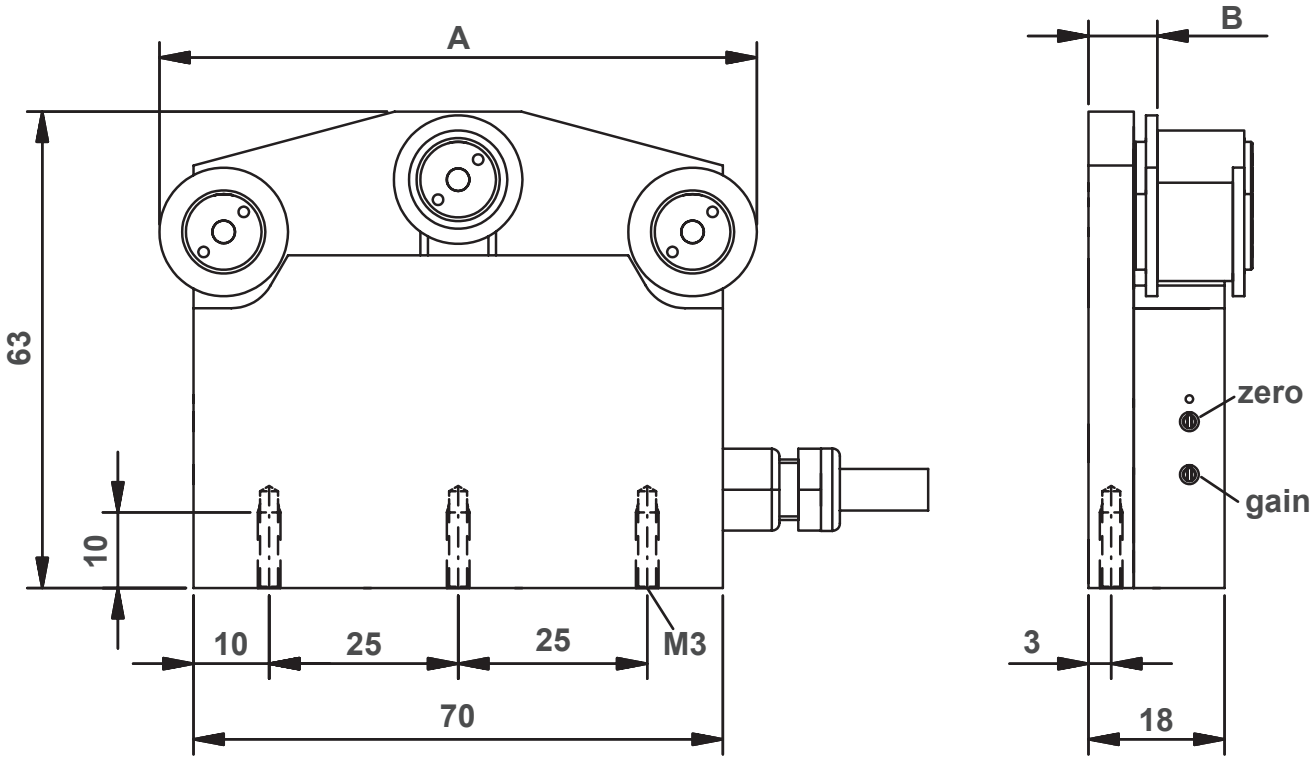

Dimensions in mm

Rollenbreite	A	B
7 mm	78 mm	8.2 mm
10 mm	79 mm	9.1 mm

Specifications subject to change without notice!

Hans Schmidt & Co GmbH
P. O. B. 1154
84464 Waldkraiburg Germany

Phone: int. + 49 / (0)8638 / 9410-0
Fax: int. + 49 / (0)8638 / 4825

e-mail: info@hans-schmidt.com
Internet: http://www.hans-schmidt.com